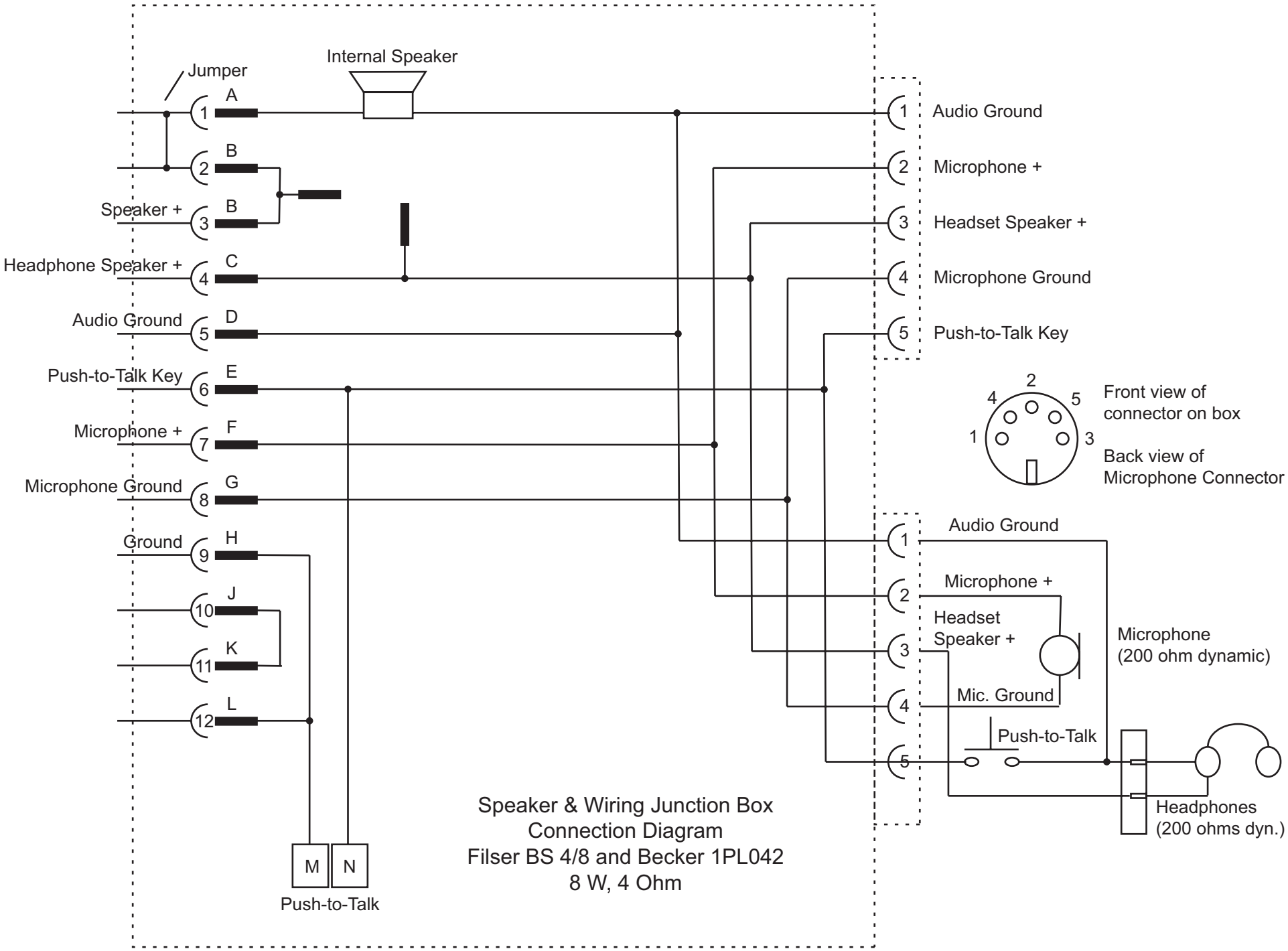
Jumper
Internal Speaker
A
B
B
C
D
E
F
G
H
J
K
L
1
2
3
4
5
6
7
8
9
10
11
12
Speaker +
Headphone Speaker +
Audio Ground
Push-to-Talk Key
Microphone +
Microphone Ground
Ground
M
N
Push-to-Talk
Audio Ground
Microphone +
Headset Speaker +
Microphone Ground
Push-to-Talk Key
Front view of connector on box
Back view of Microphone Connector
Audio Ground
Microphone +
Headset Speaker +
Mic. Ground
Push-to-Talk
Microphone (200 ohm dynamic)
Headphones (200 ohms dyn.)
Speaker & Wiring Junction Box
Connection Diagram
Filser BS 4/8 and Becker 1PL042
8 W, 4 Ohm